The BNL Muon Accelerator R&D Program

MCTF

DOE AARD Review

Gaithersburg, Md

December 3, 2008

Harold G. Kirk
Brookhaven National Laboratory

Outline

- The Brookhaven Legacy
- Recent Achievements
  - MERIT
  - ISS Neutrino Factory Scenario
  - Muon Collider Scenario
- Future Activities
  - Design and Simulations
  - Magnetic Insulation
  - High-Field Magnets
  - High-Power Target systems
  - EMMA

Past BNL Muon R&D Activities

- *A High-Energy High-Luminosity $\mu^+\mu^-$ Collider*, **Neuffer and Palmer, EPAC94**
- *$\mu^+\mu^-$ Collider – A Feasibility Study*, **Muon Collider Collaboration, Snowmass 96**
- **Muon Collider Collaboration formally organized 1997**
- **Neutrino Factory Feasibility Study I – sited at FNAL, 1999-2000**
- **Neutrino Factory Feasibility Study II – sited at BNL, 2001**
- **AGS E951 – A free mercury jet target experiment at BNL, 2001**
- **International Scoping Study for a Neutrino Factory, 2005-2007**
- **MERIT - High-Power target experiment at CERN, 2007**

Neutrino Factory Study II Sited at BNL

Features:

- 4-MW, 15Hz, 24 GeV AGS Proton Beam as driver
- $\varepsilon_\perp$ reduced from 20,000 to 7000 π mm-mrad
- Fixed Focus Alternating Gradient (FFAG) Acceleration
- Storage ring on Mount Palmer

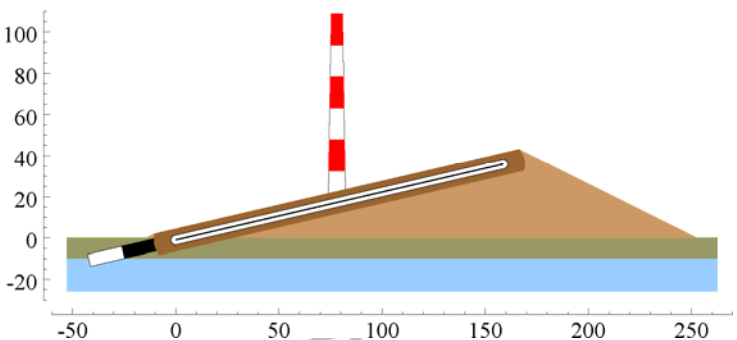

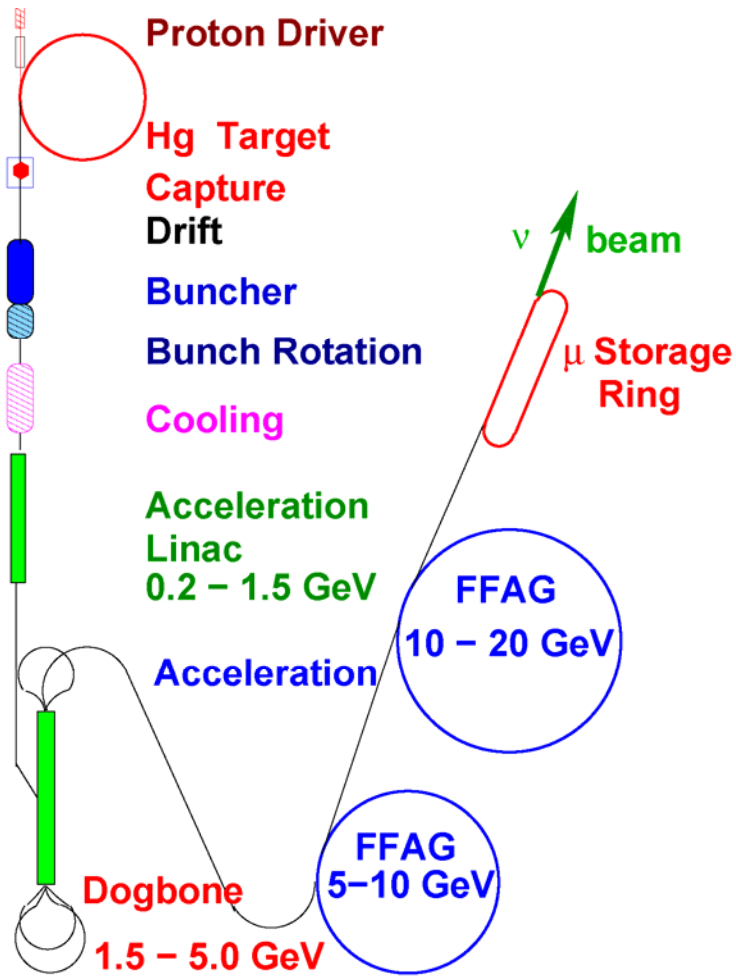

BROOKHAVEN NATIONAL LABORATORY

Harold G. Kirk

The International Scoping Study Baseline

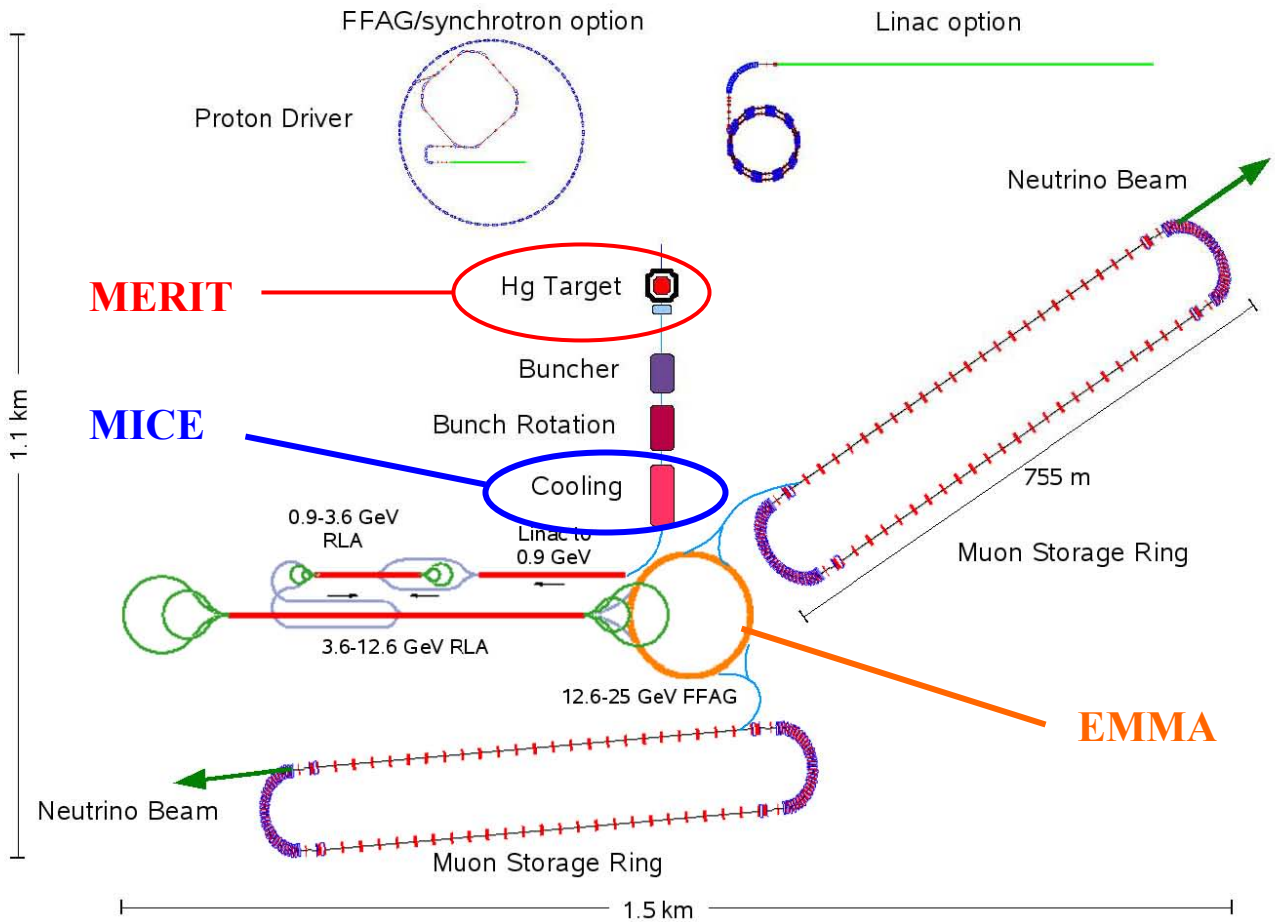

The Ionization Cooling Lattice

The MICE Experiment

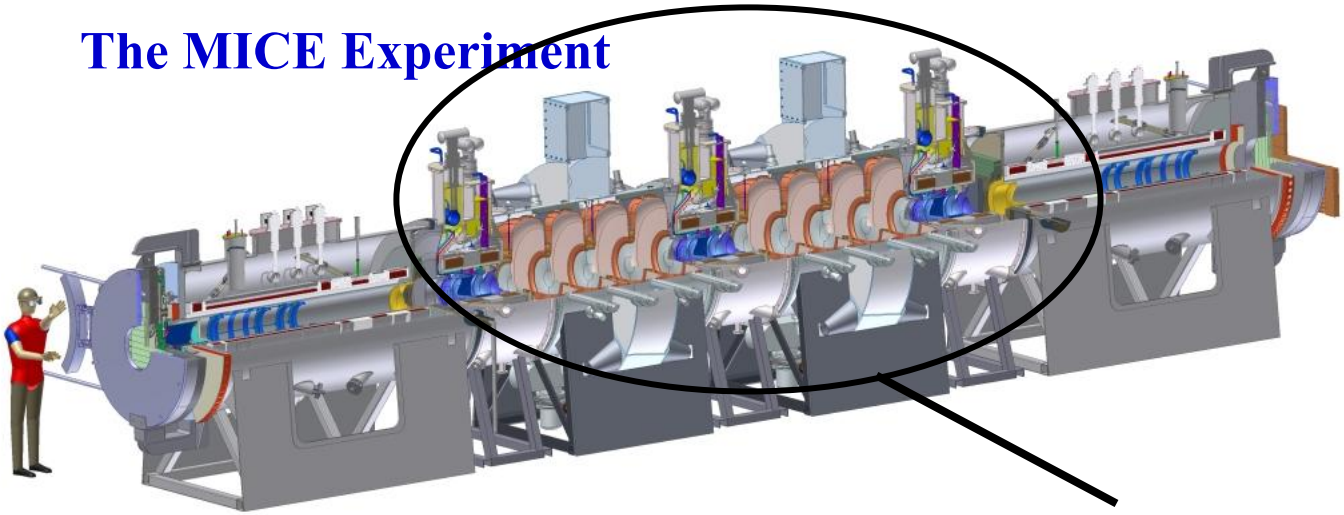

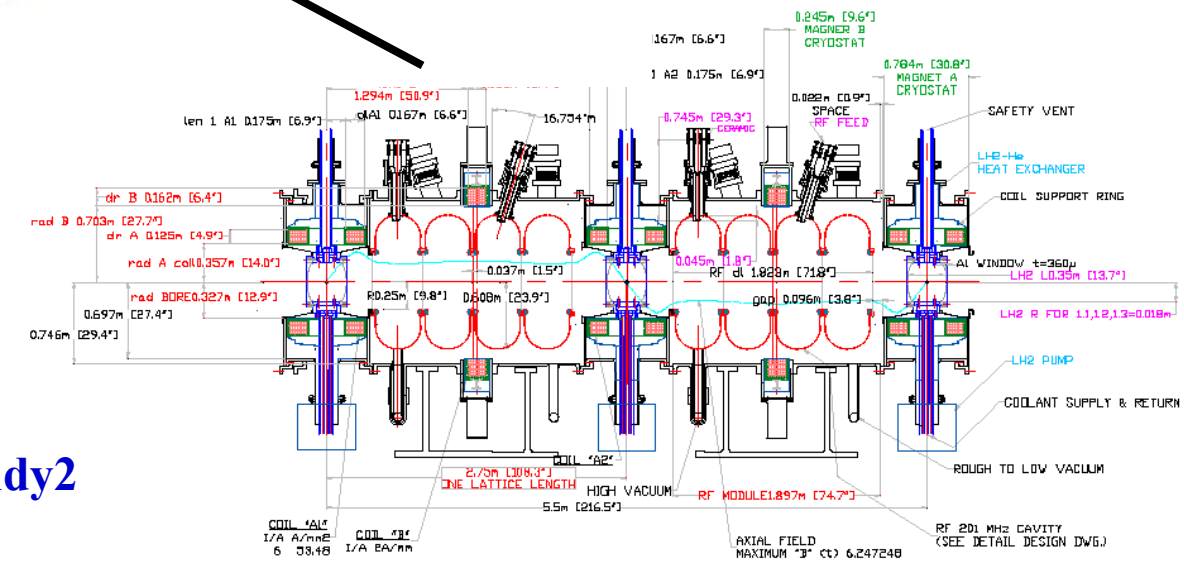

BNL Lattice for Study2

Harold G. Kirk

AGS E951 Experiment at BNL

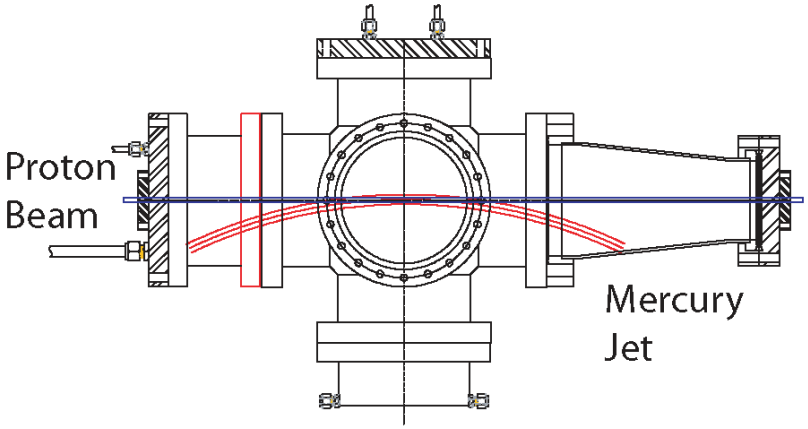

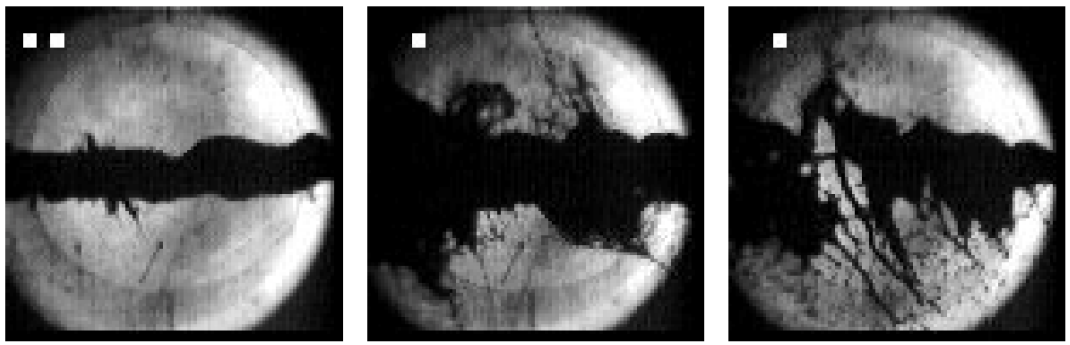

Features:

- 24 GeV, 4Tp Proton Beam
- 1 cm, 2.5m/s Hg Jet
- No Magnetic Field

Key Results:

- Dispersal velocities ~10m/s
- Dispersal Delay ≥ 40μs

The MERIT Experiment at CERN

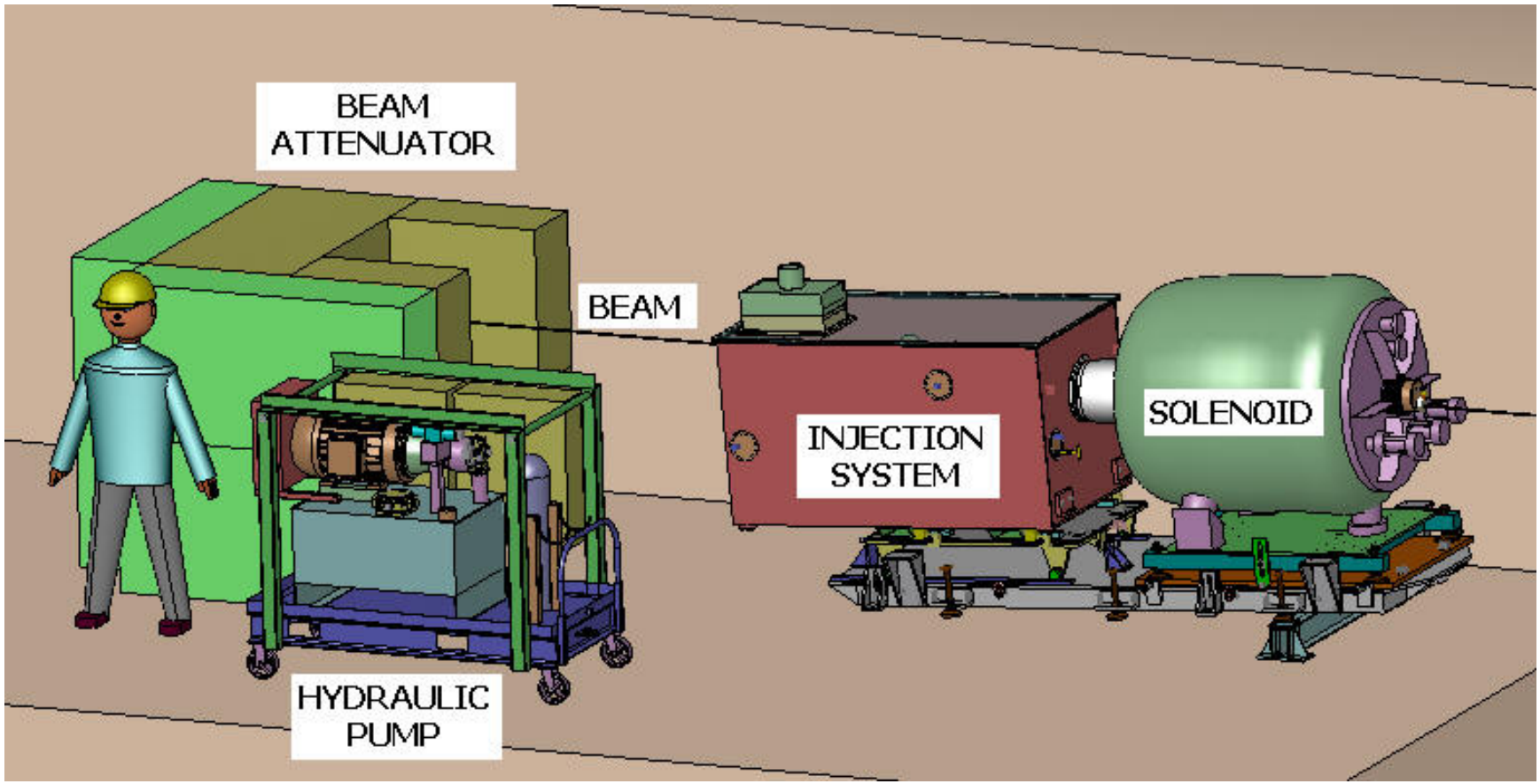

MERcury Intense Target

Harold G. Kirk

DOE AARD Review Dec. 3, 2008

Sectional view of the MERIT Experiment

MCTF

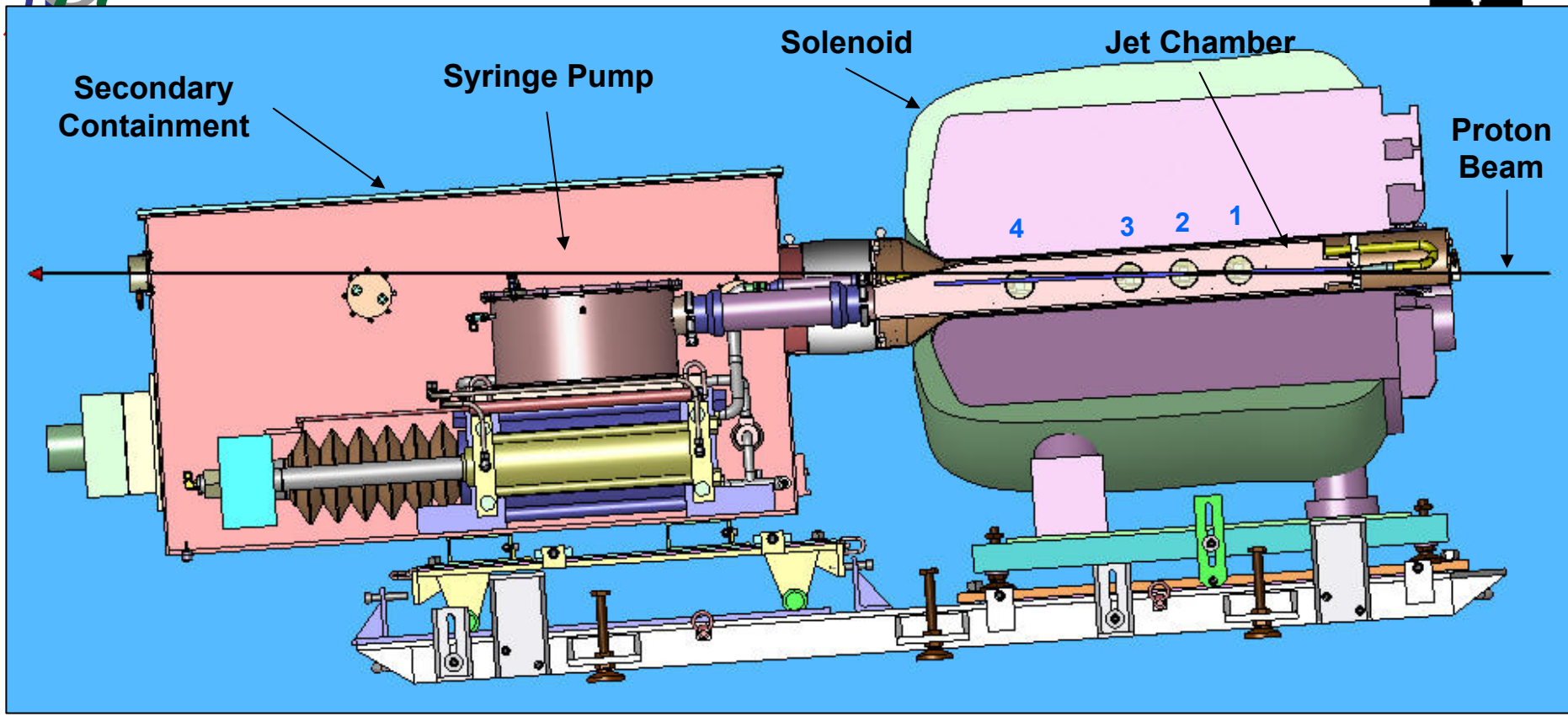

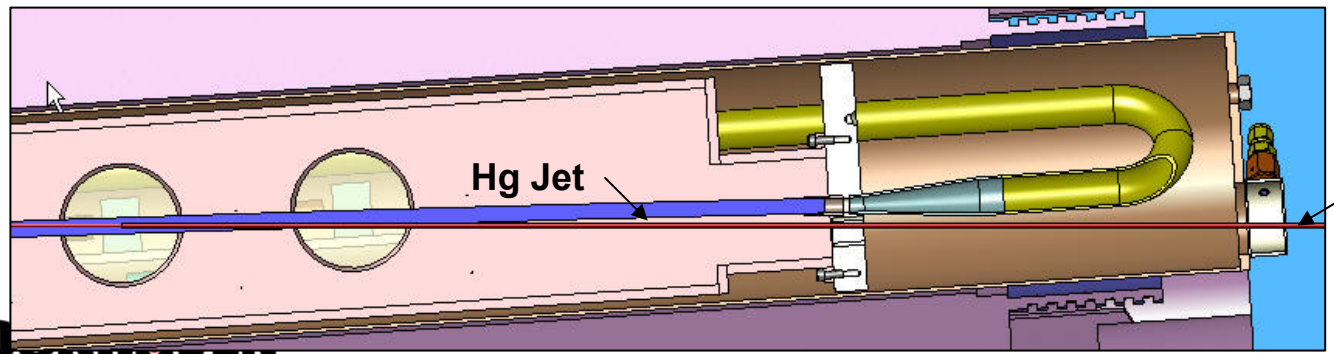

BROOKHAVEN NATIONAL LABORATORY

Harold G. Kirk

DOE AARD Review Dec. 3, 2008

15TP 14GeV Proton Beam

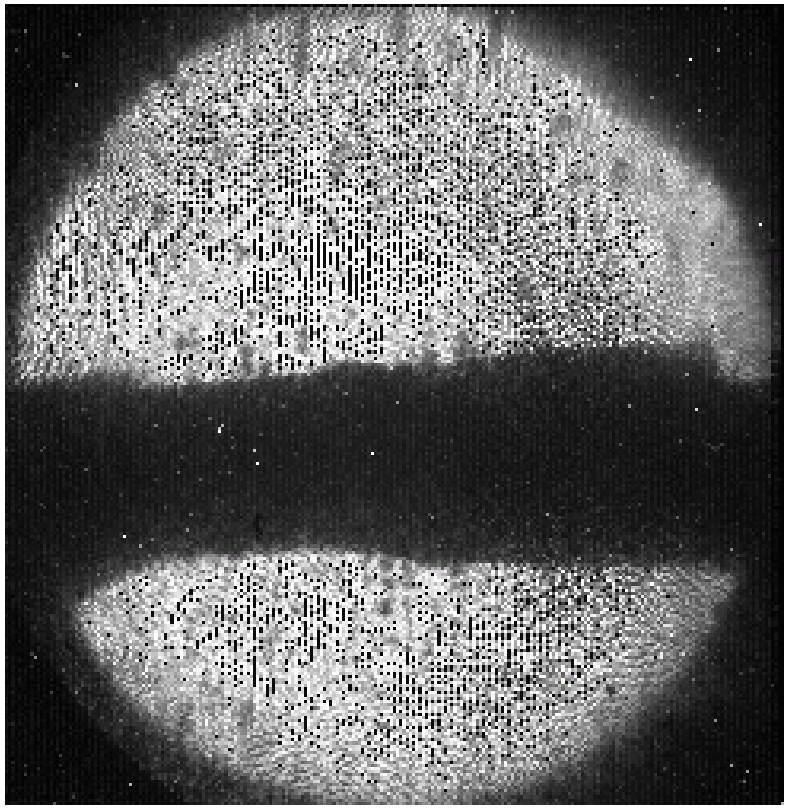

Oct. 27, 2007
Solenoid Field at 5T

Viewport 2

Beam 5016, Hg 15m/s, 100μs/frame, Total 1.6ms

The MERIT Bottom Line

The Neutrino Factory/Muon Collider target concept has been validated for 4MW, 50Hz operations.

Fixed Focus Alternating Gradient Concept

Why FFAGs ?

Large chromatic acceptance (2 to 3X)

No ramping → Fast acceleration

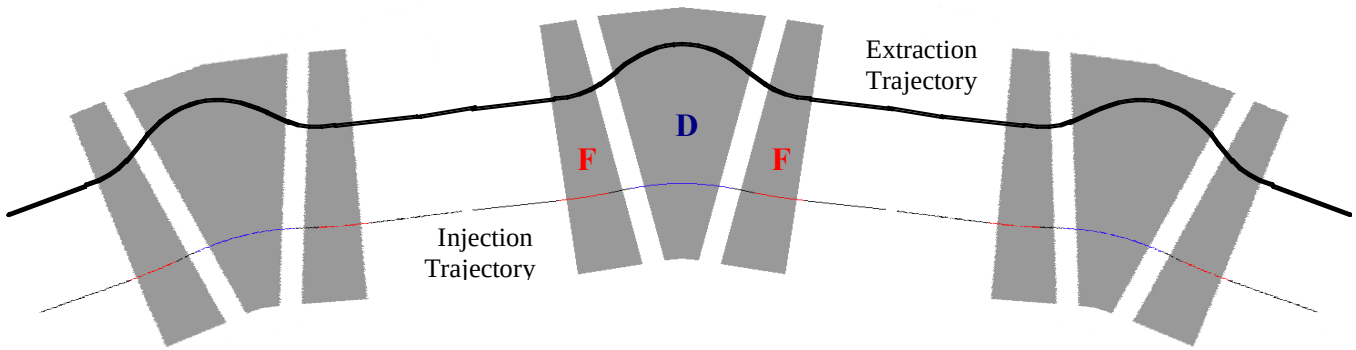

(2 to 3) x E_0

E_0

Scaling
Tune independent of momentum
Large magnets
Low frequency RF

Non-Scaling
Momentum dependent tunes
Smaller less expensive magnets
Can use higher frequency RF

The EMMA Experiment

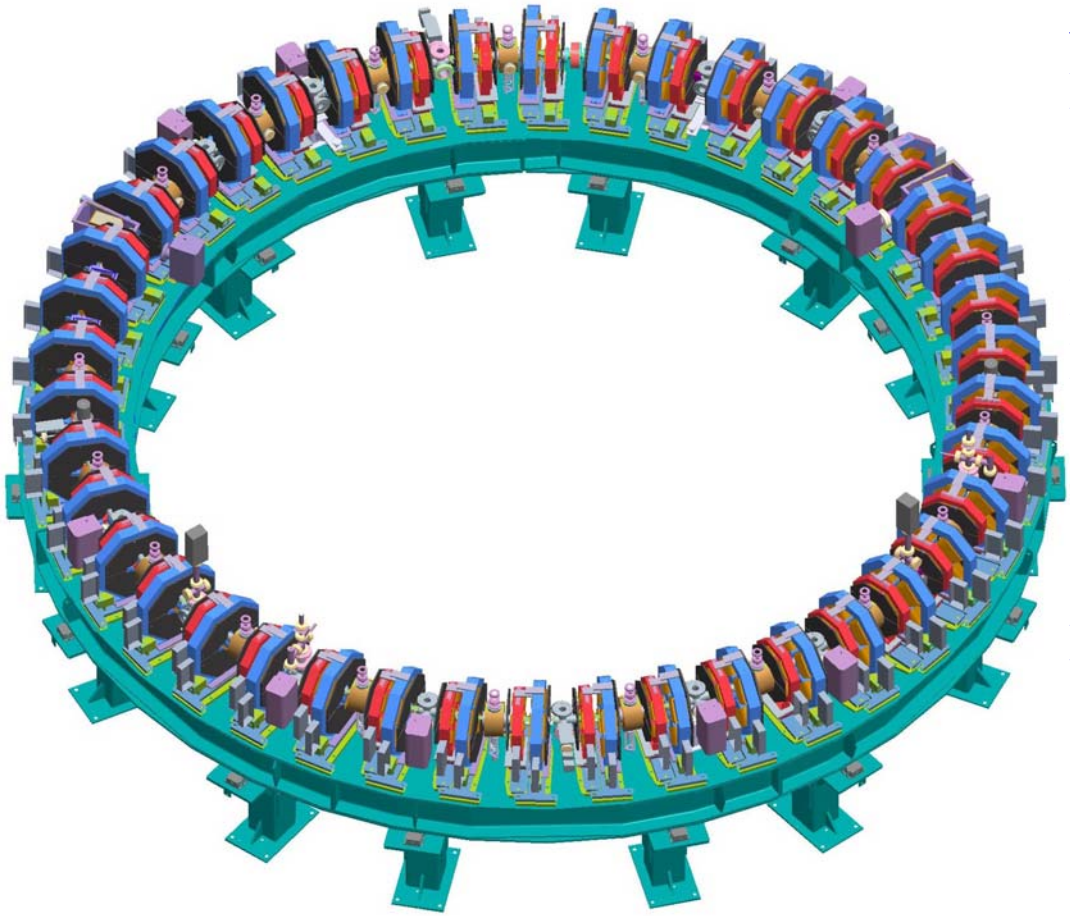

An electron analog machine for a proof-of-principle test of the non-scaling FFAG concept

Machine will operate with 10-20 MeV electrons

The experiment will be run in 2010 at the Daresbury Laboratory

BNL Scientific Leadership

Harold G. Kirk

The Muon Collider

MCTF

Key Features

- Frontend same as Neutrino Factory
- $\varepsilon_\perp$ reduced from 20,000 to 25 π mm-mrad
- 6D ($\varepsilon_\perp$ & ε_L) cooling
- Acceleration to 0.75/2 TeV

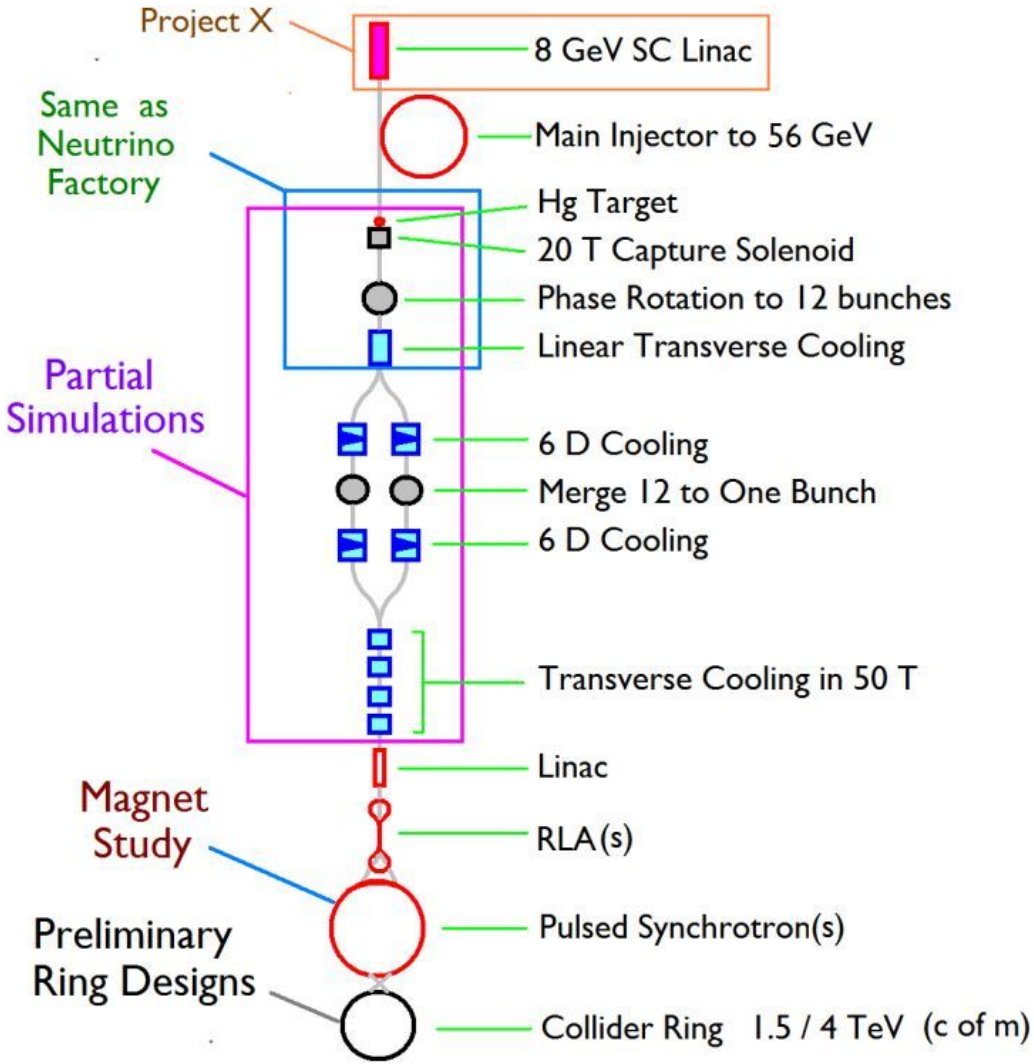

BROOKHAVEN NATIONAL LABORATORY

Harold G. Kirk

6D Ionization Cooling

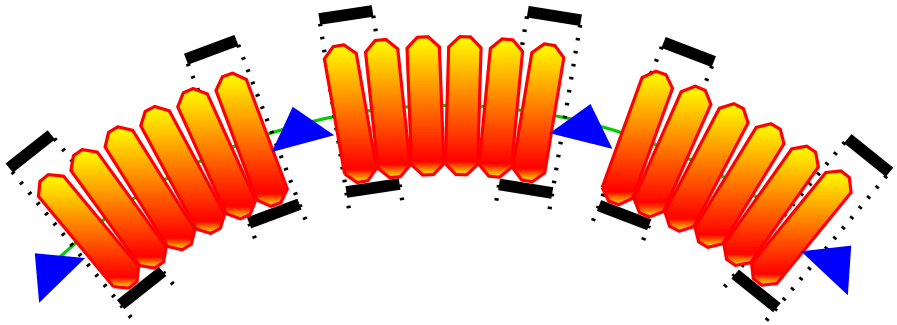

To achieve longitudinal cooling need bending and wedge absorbers

BNL Design

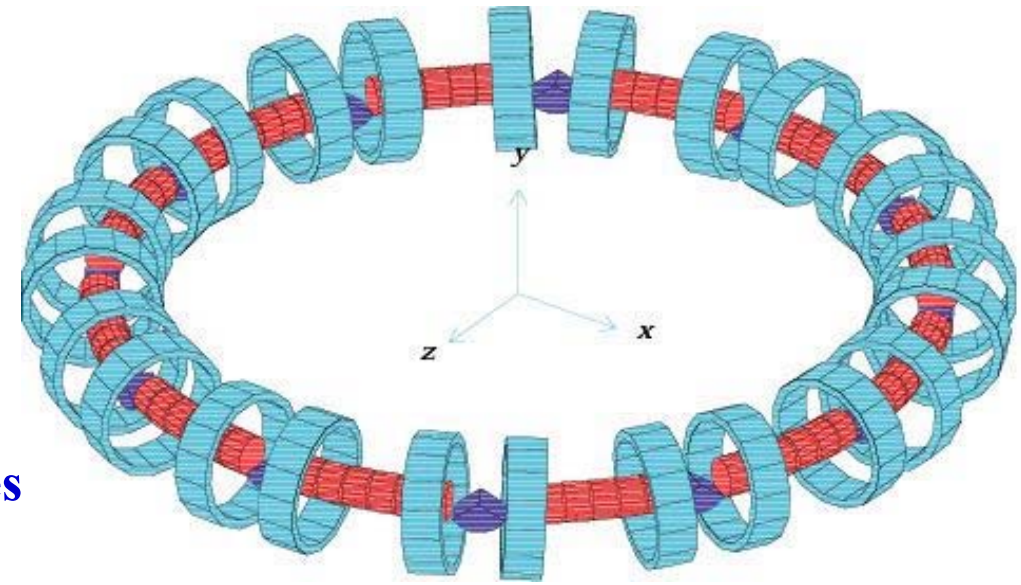

- The RFOFO cooling ring
- First viable 6D cooling option
- Injection with large emittances is an issue

Harold G. Kirk

The Guggenheim Lattice

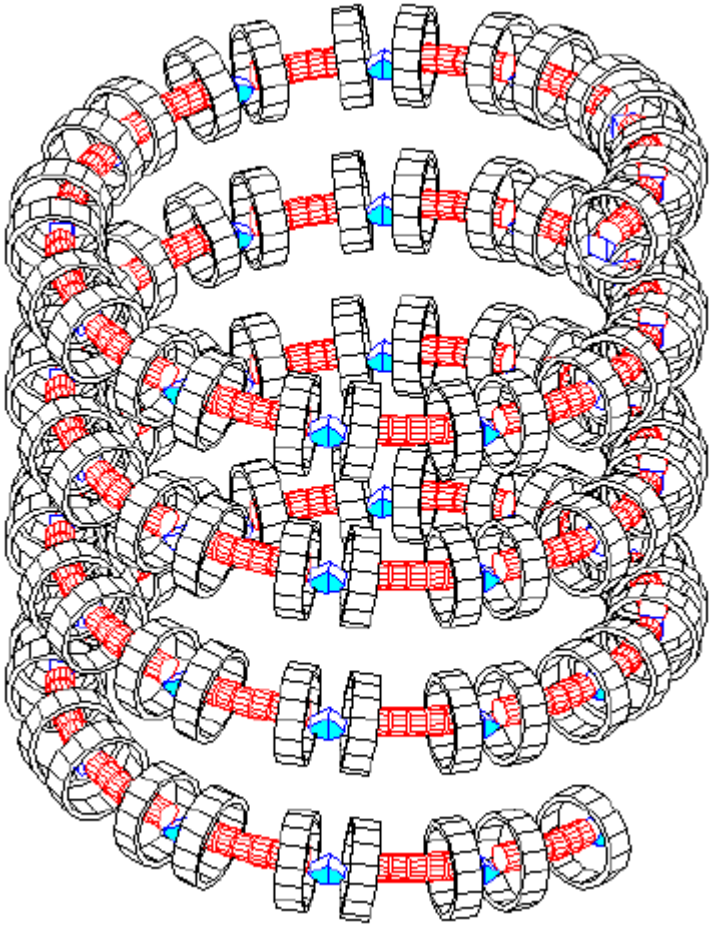

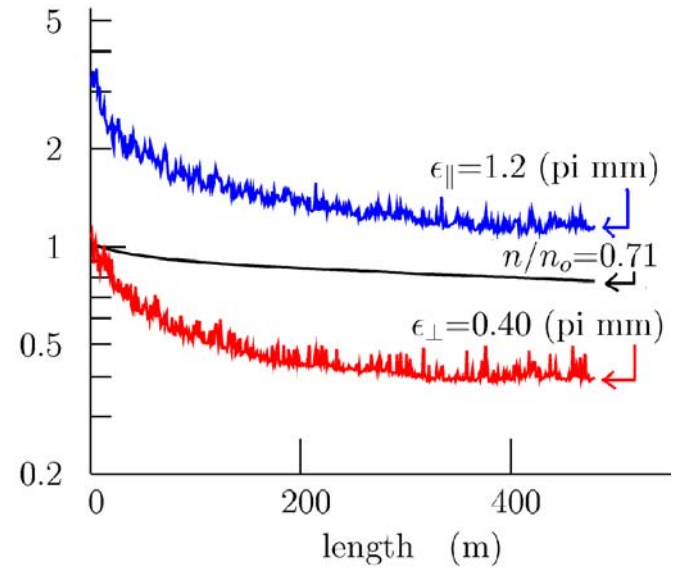

Negative-

- **No reuse of rf and solenoids**

Positive-

- **No injection/ejection issues**
- **Can taper the elements for more efficient cooling**

Future BNL Muon Efforts

MCTF

Palmer's P5 Presentation – March 6, 2008

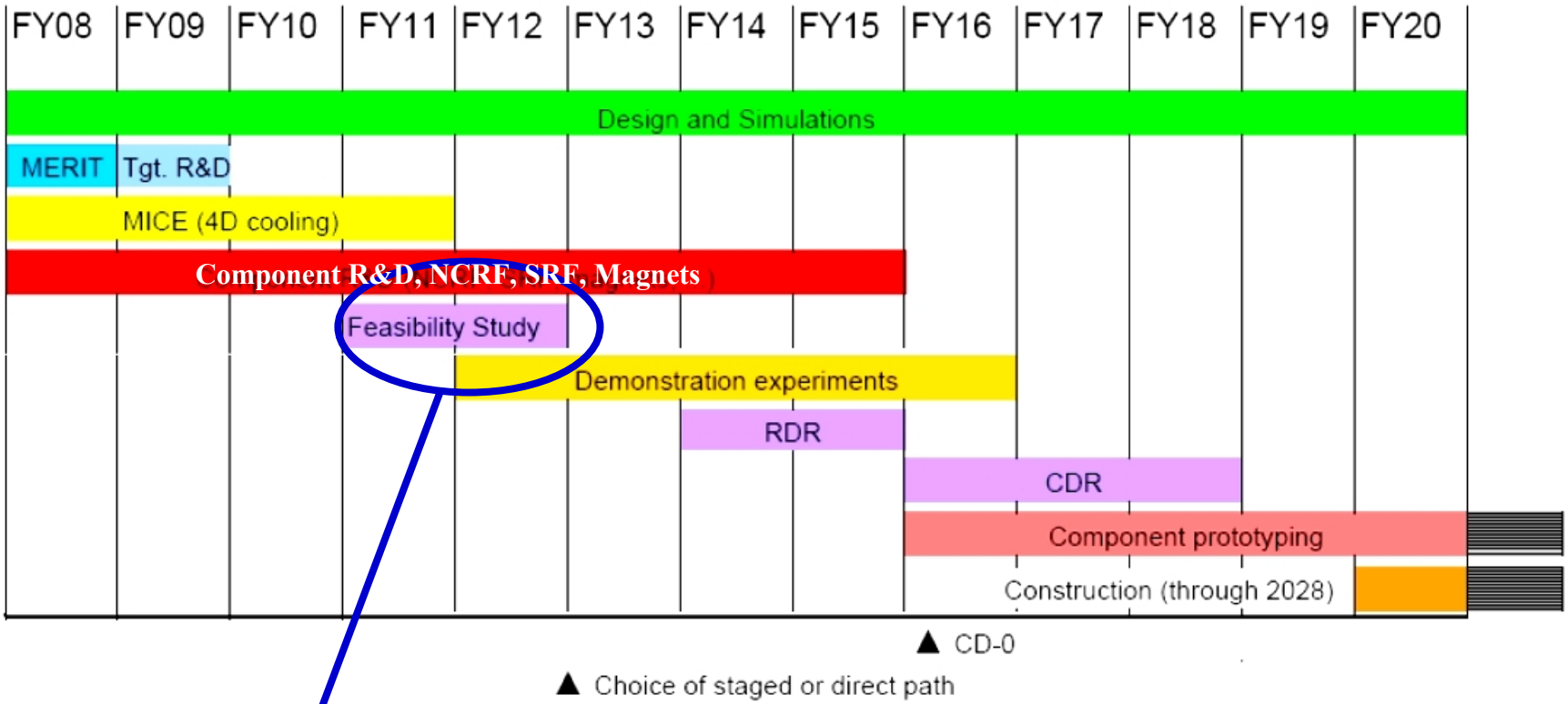

The core of this plan is the delivery of a Muon Collider Feasibility Study in the 2012-2013 timeframe. BNL seeks to support this plan.

BNL Muon R&D Plans

The BNL Advanced Accelerator Group will:

- Continue support for the simulation code ICOOL
- Advance the Muon Collider cooling scenario
- Investigate the causes and propose mitigations for the rf breakdown in magnetic field issue
- Supply scientific leadership for the EMMA FFAG experiment
- Support the International Design Study for a Neutrino Factory
  - Target systems
  - Acceleration scenarios
- Pursue the development of high-field solenoids (≤ 50T) required for final cooling
- Complete the MERIT experiment

Design and Simulations

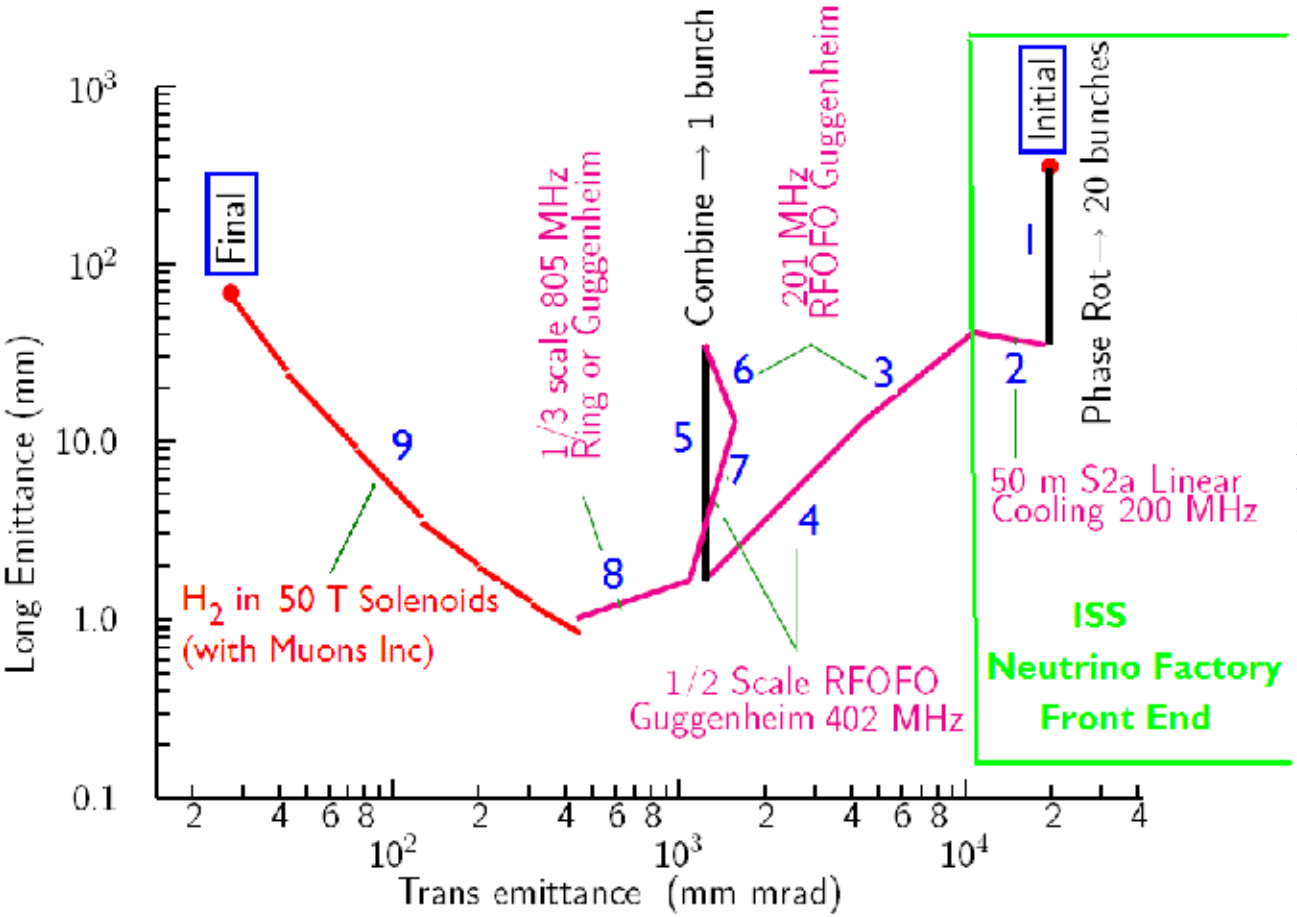

The only complete cooling scenario for a Muon Collider

Each section has been partially simulated

Now need to advance toward a full end-to-end simulation with full matching between segments

RF Breakdown in Magnetic Fields

The Issue

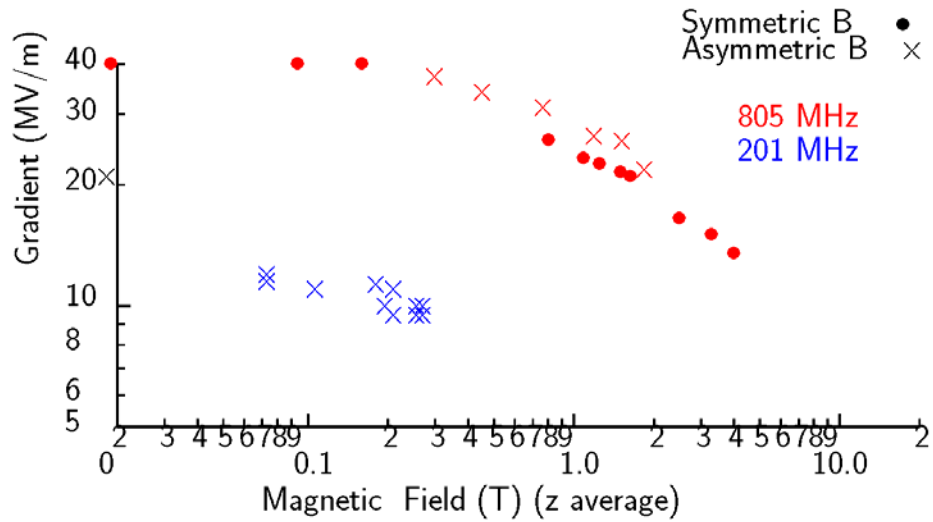

A model of the cause

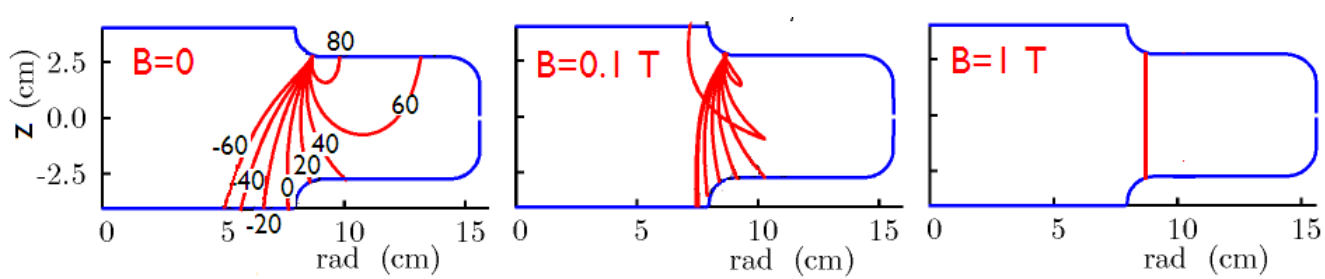

Magnetic Insulation Concept

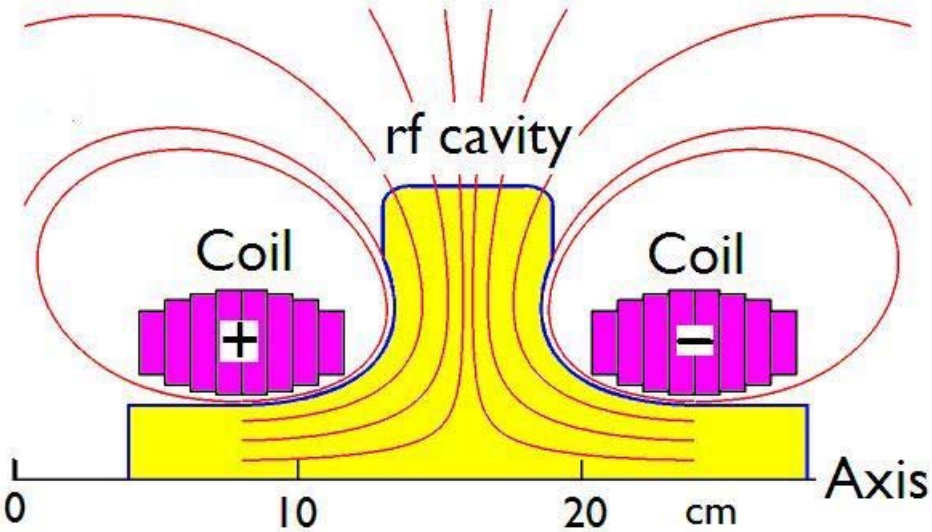

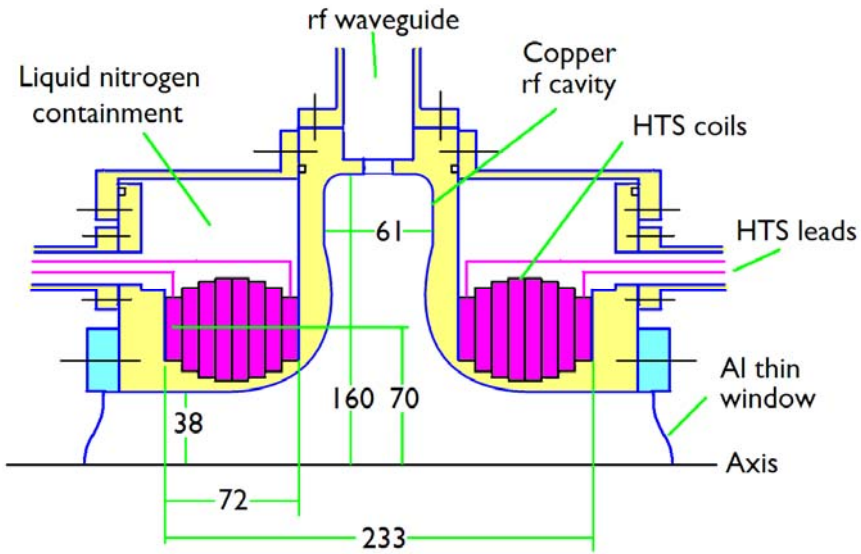

A possible solution:

RF cavity conforms to magnet field lines

Requires a new cooling lattice

A possible demonstration experiment:

An 805 MHz RF cavity with HTS coils embedded in the irises

BNL Concept
Work in Progress

Harold G. Kirk

High-Field Solenoids

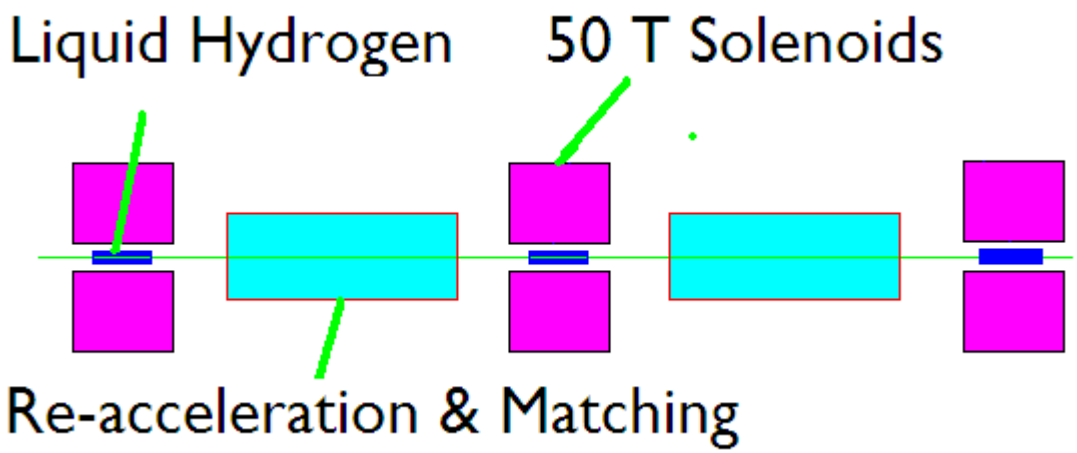

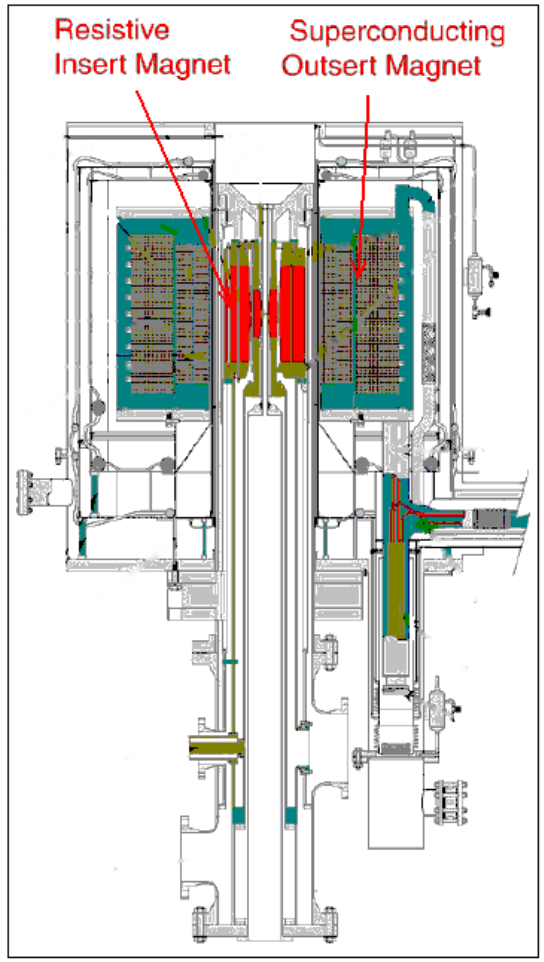

NHMFL 45 T Hybrid Magnet

- Final cooling can be accomplished with 50T solenoids
- A hybrid 45T solenoid exists at the National High Magnetic Field Laboratory
- But the solenoid requires 30MW of power to operate
- Need to find a solution for this magnet to operate at lower power levels for suitable accelerator applications
- Collaboration with BNL Superconducting Magnet Division

Ramp up in AAG FTEs

The AAG plans to go from the current 6.5 scientific FTEs to 11 FTEs in FY11. This will include 7 staff members, 3 post-docs, and 1 grad. student

Task	FY08	FY09	FY10	FY11
Design & Simulations	3.0	3.5	4	4.5
NF IDS	0.8	1.3	1.3	1.5
RF R&D	1	1.5	1.5	2
Magnet Studies	0	0.5	1.2	1.5
Target Studies	1.7	1.5	1.5	1.5
Total	6.5	8.3	9.5	11

4.7 Staff → 7 Staff
1 Post-doc → 3 Post-doc
0.8 Grad. → 1 Grad.

Summary

- BNL proposes to continue to provide scientific leadership within the U.S. Muon Accelerator R&D program
- The U.S. Muon Collaborations (NFMCC and MCTF) have estabished a goal of a Muon Collider Feasibility study by 2013 (Geer's Dec. 2 talk)
- In order to support this goal, BNL proposes to increase the FTEs of the Advanced Accelerator Group from its current 6.5 to 11 by FY11
- BNL activities will focus on:
  - Muon Collider design and simulations
  - International Design Study for a Neutrino Factory
  - RF breakdown studies
  - High-field solenoid development
  - High-power target studies
  - EMMA (FFAGs)